由 Autodesk 教育版产品制作

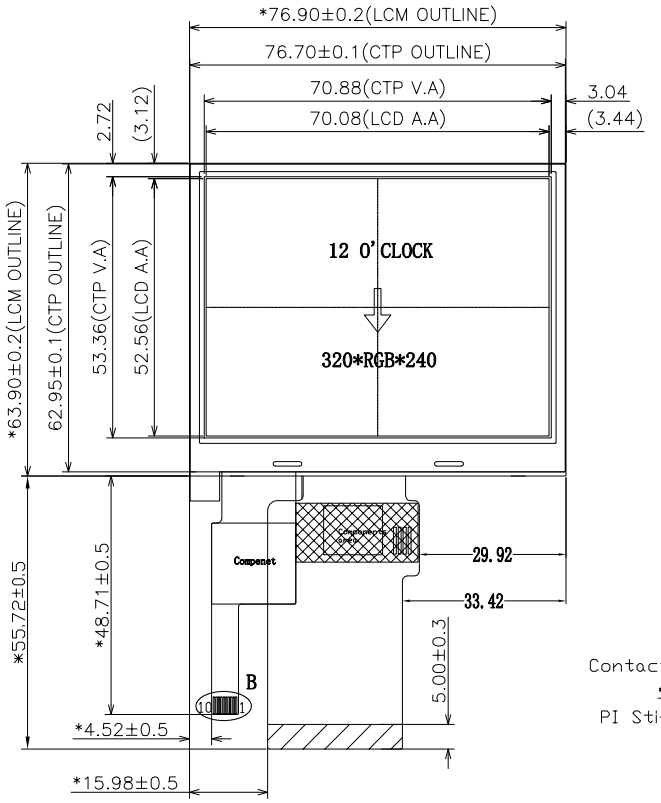

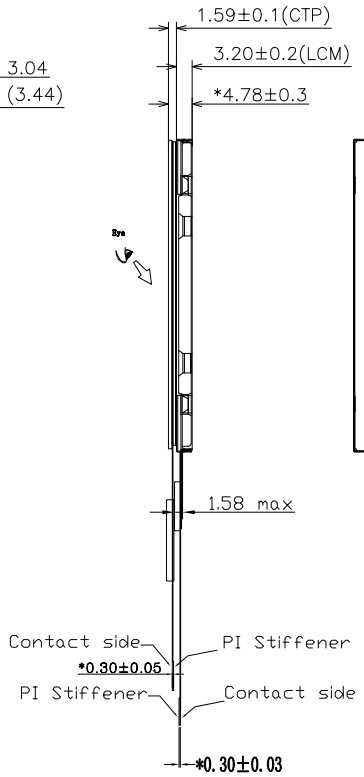

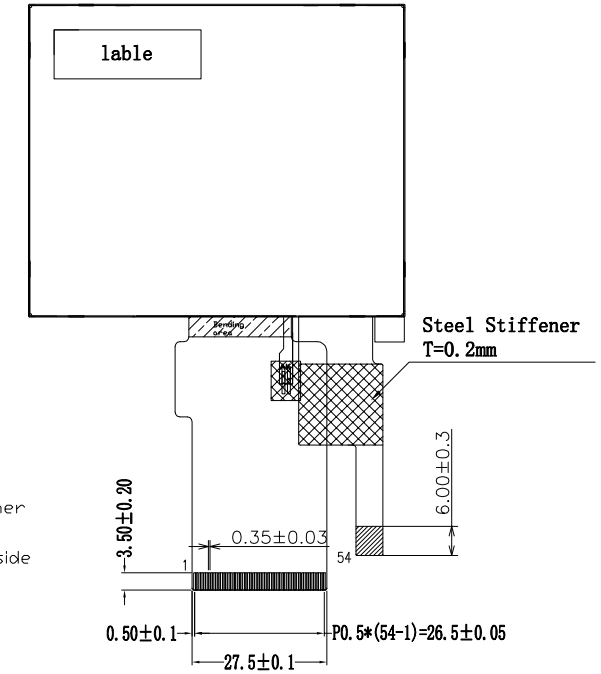

LCM PIN Definition

1	LEDK	29	D17
2	LEDK	30	D18
3	LEDA	31	D19
4	LEDA	32	D20
5	NC	33	D21
6	NC	34	D22
7	NC	35	D23
8	RESET	36	HSYNC
9	SPI_CS	37	VSYNC
10	SPI_SCK	38	DCLK
11	SPI_SDA	39	NC
12	D00	40	NC
13	D01	41	VDD
14	D02	42	VDD
15	D03	43	NC
16	D04	44	NC
17	D05	45	NC
18	D06	46	NC
19	D07	47	NC
20	D08	48	NC/X-
21	D09	49	NC/Y-
22	D10	50	NC/X+
23	D11	51	NC/Y+
24	D12	52	DE
25	D13	53	GND
26	D14	54	GND
27	D15		
28	D16		

CTP PIN Definition

1	VSS
2	VDDT
3	SCL
4	NC
5	SDA
6	NC
7	RST
8	WAKE
9	INT
10	VSS

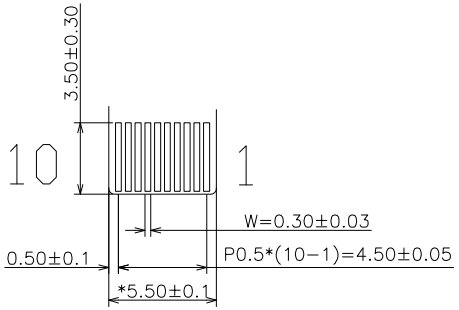

DETAIL"B"(4:1)

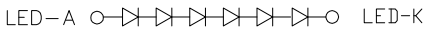

CURRENT IF=20mA, 19.2V(REF.)

LCD type	3.5"TFT, Transmissive, Normally white, TN
Resolution	320(RGB)*240
View direction	12 0'clock
Driver IC	HX8238-D
Color Depth	16.7M
Interface Types	3SPI/RGB-24bit
Operating voltage	3.3V
TP/Lens	With CTP(FT5316DME)
Backlight LEDs	6LEDs
Surface luminance	200min, 250typ(cd/m2)
Operating temperature	-20 ℃~70 ℃
Storage temperature	-30 ℃~80 ℃
Storage Humidity	60℃ 90% max

"☞" Need to pay attention to the key size with *

东莞市一众显示科技有限公司
DONG GUAN TEAM SOURCE DISPLAY TECH. CO, LTD.

版本(Version)	变更记录(Change History)	日期(Date)
V1	Initial Release	Jul-23-2018
V2		
V3		

视 角 (View):		比例(Proportion):	1 : 1
单 位 (Unit):	M M	Unnoted tolerance	±0.2
产品型号 (Product Type):	TST035QVZH-43C		
版 本 (Version):	V1		

设 计 (DESIGN)	审 核 (AUDITING)	批 准 (APPROVED)

由 Autodesk 教育版产品制作